ES

Privia

# PX-700

# USER'S GUIDE
# GUÍA DEL USUARIO

Please keep all information for future reference.
Guarde toda información para tener como referencia futura.

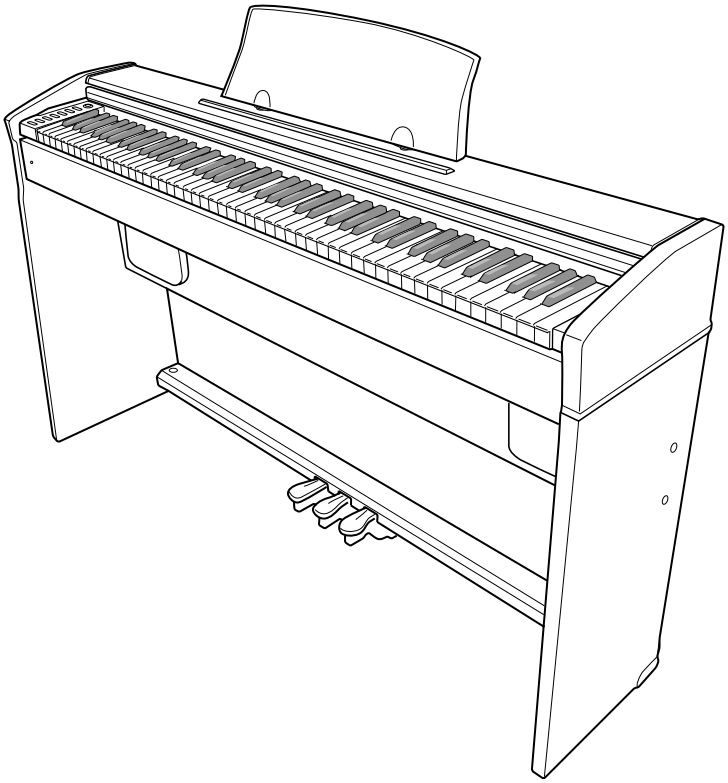

**Safety Precautions**
Before trying to use the piano, be sure to read the separate "Safety Precautions".

**Precauciones de seguridad**
Antes de intentar usar el piano, asegúrese de leer las "Precauciones de seguridad" separadas.

PX700ES1B

CASIO®

TO REDUCE THE RISK OF FIRE OR ELECTRIC SHOCK, REFER SERVICING TO QUALIFIED SERVICE PERSONNEL.

## IMPORTANT SAFETY INSTRUCTIONS

1. Read these instructions.
2. Keep these instructions.
3. Heed all warnings.
4. Follow all instructions.
5. Do not use this apparatus near water.
6. Clean only with dry cloth.
7. Do not block any ventilation openings. Install in accordance with the manufacturer's instructions.
8. Do not install near any heat sources such as radiators, heat registers, stoves, or other apparatus (including amplifiers) that produce heat.
9. Do not defeat the safety purpose of the polarized or grounding-type plug. A polarized plug has two blades with one wider than the other. A grounding type plug has two blades and a third grounding prong. The wide blade or the third prong are provided for your safety. If the provided plug does not fit into your outlet, consult an electrician for replacement of the obsolete outlet.
10. Protect the power cord from being walked on or pinched particularly at plugs, convenience receptacles, and the point where they exit from the apparatus.
11. Only use attachments/accessories specified by the manufacturer.
12. Use only with the cart, stand, tripod, bracket, or table specified by the manufacturer, or sold with the apparatus. When a cart is used, use caution when moving the cart/apparatus combination to avoid injury from tip-over.

13. Unplug this apparatus during lightning storms or when unused for long periods of time.
14. Refer all servicing to qualified service personnel. Servicing is required when the apparatus has been damaged in any way, such as power-supply cord or plug is damaged, liquid has been spilled or objects have fallen into the apparatus, the apparatus has been exposed to rain or moisture, does not operate normally, or has been dropped.

The apparatus shall not be exposed to dripping or splashing and that no objects filled with liquids, such as vases, shall be placed on the apparatus.

The power indicator being unlit does not mean the apparatus is completely disconnected from the MAINS.
When you need to have the apparatus completely disconnected from the MAINS, you must unplug the power cord. For that purpose, locate the apparatus in a way that secures easy access to the power cord.

## NOTICE

This equipment has been tested and found to comply with the limits for a Class B digital device, pursuant to Part 15 of the FCC Rules. These limits are designed to provide reasonable protection against harmful interference in a residential installation. This equipment generates, uses and can radiate radio frequency energy and, if not installed and used in accordance with the instructions, may cause harmful interference to radio communications. However, there is no guarantee that interference will not occur in a particular installation. If this equipment does cause harmful interference to radio or television reception, which can be determined by turning the equipment off and on, the user is encouraged to try to correct the interference by one or more of the following measures:

- Reorient or relocate the receiving antenna.
- Increase the separation between the equipment and receiver.
- Connect the equipment into an outlet on a circuit different from that to which the receiver is connected.
- Consult the dealer or an experienced radio/TV technician for help.

## FCC WARNING

Changes or modifications not expressly approved by the party responsible for compliance could void the user's authority to operate the equipment.

### *Important!*

Please note the following important information before using this product.

- Before using the AD-12 Adaptor to power the unit, be sure to check the AC Adaptor for any damage first. Carefully check the power cord for breakage, cuts, exposed wire and other serious damage. Never let children use an AC adaptor that is seriously damaged.
- The product is not intended for children under 3 years.
- Use only CASIO AD-12 adaptor.
- The AC adaptor is not a toy.
- Be sure to disconnect the AC adaptor before cleaning the product.

This mark applies in EU countries only.

CASIO Europe GmbH
Bornbarch 10, 22848 Norderstedt, Germany

406A-E-002A

# Contents


## General Guide ..... E-2

Connecting Headphones ..... E-2
About the FUNCTION button ..... E-3
Playing Back All the Music Library Tunes ..... E-3

## Power Supply ..... E-4

Using the AC Adaptor ..... E-4

## Playing with Different Tones ..... E-5

Selecting and Playing a Tone ..... E-5
Adjusting the Brilliance of a Tone ..... E-5
Layering Two Tones ..... E-6
Assigning Different Tones to the Left and Right Sides of the Keyboard ..... E-6
Using Tone Effects ..... E-7
Using the Piano's Pedals ..... E-7
Using the Built-in Metronome ..... E-8

## Learning to Play the Music Library Tunes ..... E-9

Playing a Music Library Tune ..... E-9
Practicing a Music Library Tune ..... E-9
Adjusting Built-in Tune Volume ..... E-9

## Recording to and Playing Back from Song Memory ..... E-10

Recording Your Keyboard Play ..... E-10
Playing Back from Song Memory ..... E-12
Deleting Song Memory Data ..... E-12

## Other Settings ..... E-13

Changing the Keyboard Touch ..... E-13
Changing the Piano Key ..... E-13
Changing the Pitch of the Piano to Match Another Instrument ..... E-13
Using Digital Piano Setup Memory ..... E-13
Using MIDI ..... E-14

## Assembling the Stand ..... E-15

Unpacking ..... E-15
Assembling the Stand ..... E-15
Mounting the Digital Piano onto the Stand ..... E-17
Installing the Music Stand ..... E-17

## Troubleshooting ..... E-18

## Specifications ..... E-19

## Operational Precautions ..... E-20

Locating the Unit ..... E-20
Care of the Unit ..... E-20
Lithium Battery ..... E-20

## Setting Control Key Chart ..... E-21

## Appendix ..... A-1

Tone List ..... A-1
Song List ..... A-1

## MIDI Implementation Chart



Company and product names used in this manual may be registered trademarks of others.

# General Guide

**Bottom**

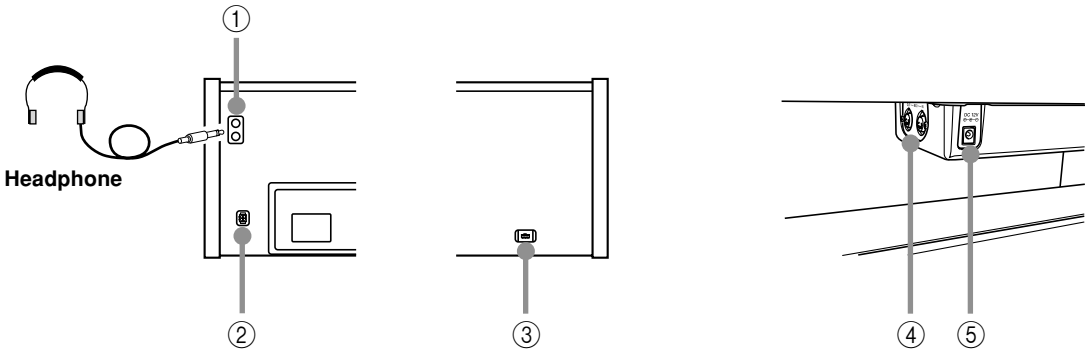


## *Connecting Headphones*

Connect commercially available headphones to the digital piano's headphones jack. This cuts off the built-in speakers, which means you can practice even late at night without disturbing others. To protect your hearing, make sure that you do not set the volume level too high when using headphones.

**IMPORTANT!**

- Whenever connecting headphone, first set the VOLUME knob of the digital piano and the volume controller of the external equipment to relatively low volume settings. You can later adjust volume to the level you want after connections are complete.

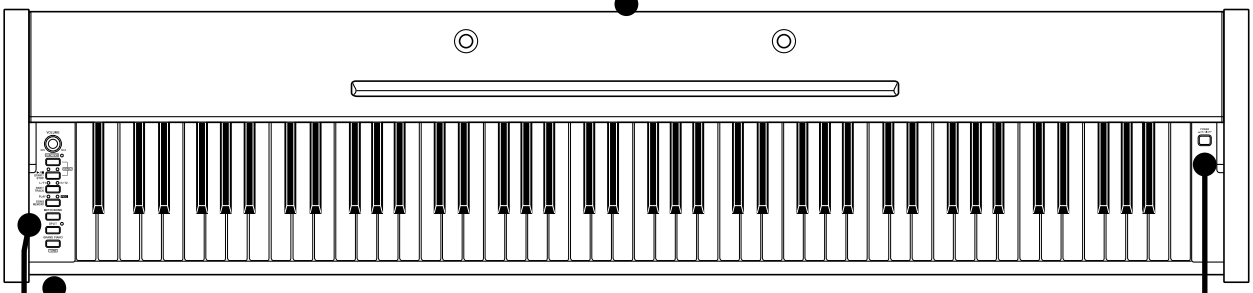

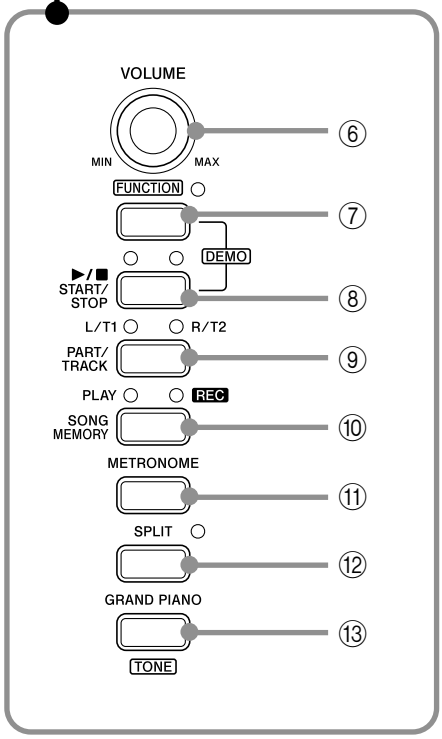


**Front**

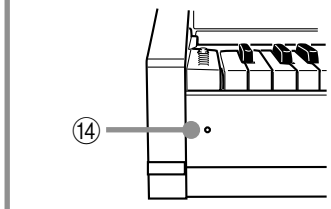


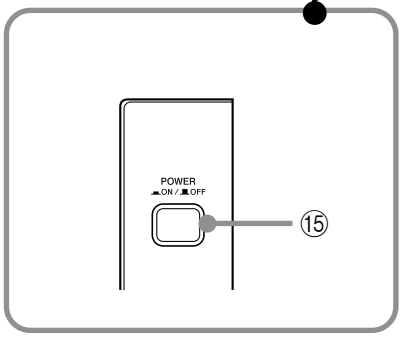


### ⚠ *CAUTION*

Make sure that the cover of the piano is fully open whenever you are playing on the keyboard. A partially open cover can suddenly close unexpectedly and pinch your fingers.

① PHONES jacks
② Speaker connector
③ PEDAL connector
④ MIDI OUT/IN terminals
⑤ DC 12V jack
⑥ VOLUME knob
⑦ FUNCTION button
⑧ START/STOP button
⑨ PART/TRACK button, L/T1 (Left/Track1) indicator, R/T2 (Right/Track2) indicator
⑩ SONG MEMORY button, PLAY indicator, REC indicator
⑪ METRONOME button
⑫ SPLIT button
⑬ GRAND PIANO, TONE button
⑭ Power Indicator
⑮ POWER button

**NOTE**

- Key, button, and other names are indicated in the text of this manual using bold type.

## About the FUNCTION button

The FUNCTION button makes it possible to perform a variety of useful functions. Note the following general information about using the FUNCTION button.

- An indicator lamp above the FUNCTION button flashes while it is depressed. The lamp goes out when you release the FUNCTION button.

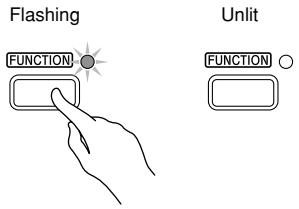


- The FUNCTION button is always used in combination with another button or keyboard key. You hold down the FUNCTION button as you press another button or keyboard key.
  - The indicator lamp above the button flashes for a few seconds at high speed to let you know that the setting is complete.
    *Example*: "Selecting and Playing a Tone" on page E-5
- For details about all the keyboard key functions you can perform with the FUNCTION button, see "Setting Control Key Chart" on page E-21.

## Playing Back All the Music Library Tunes

The following procedure plays back the Music Library tunes in sequence.

1. While holding down the **FUNCTION** button, press the **START/STOP** button at the same time.
   - This starts sequential playback of the Music Library tunes.
   - You can play along with the Music Library tunes on the keyboard, if you want. Tone assigned to the keyboard is the one that is preset for the Music Library tune that is playing.
2. Press the **START/STOP** button again to stop Music Library tune play.

# Power Supply

You can power this digital piano by plugging it into a standard household power outlet.
Be sure you turn off power and unplug the power cord from the electrical outlet whenever the digital piano is not in use.

## Using the AC Adaptor

Make sure that you use only the AC adaptor specified for this digital piano.

**Specified AC Adaptor: AD-12**

**[Bottom]**

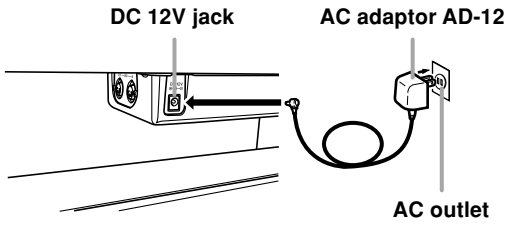


Note the following important precautions to avoid damage to the power cord.

● **During Use**
- Never pull on the cord with excessive force.
- Never repeatedly pull on the cord.
- Never twist the cord at the base of the plug or connector.
- The power cord should not be stretched tight while it is in use.

● **During Movement**
- Before moving the digital piano, be sure to unplug the AC adaptor from the power outlet.

● **During Storage**
- Loop and bundle the power cord, but never wind it around the AC adaptor.

***IMPORTANT!***

- Make sure that the product is turned off before connecting or disconnecting the AC adaptor.
- Using the AC adaptor for a long time can cause it to become warm to touch. This is normal and does not indicate malfunction.

## Accessories and Options

Use only the accessories and options specified for this digital piano. Use of non-authorized items creates the danger of fire, electric shock, and personal injury.

# Playing with Different Tones

## Selecting and Playing a Tone

The piano comes with 11 built-in tones.

- The names of the tones are marked above the keyboard keys to which they are assigned.

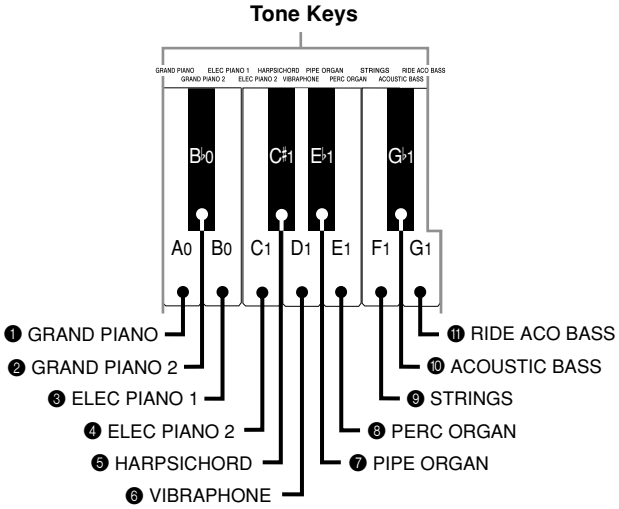


- The GRAND PIANO tone was recorded with stereo sampling.

### To select a tone

1. Press the **POWER** button.
2. Select the tone you want.
   - To select GRAND PIANO
     Press the GRAND PIANO button.
   - To select one of the other tones
     - While holding down the FUNCTION button, press the keyboard key that corresponds to the tone you want to select.

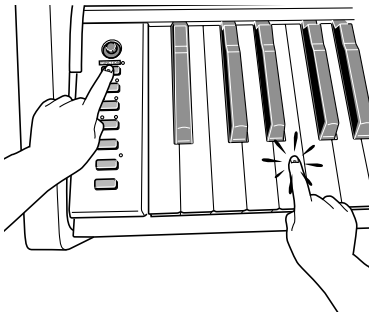

- You can also select a tone by holding down the FUNCTION button and pressing the GRAND PIANO button. Each press of the GRAND PIANO button cycles through the tone settings in sequence from ❶ through ⓫ as shown in the illustration.
  * A note does not sound when you press a keyboard key while holding down the FUNCTION button.

3. Use the **VOLUME** knob to adjust the volume.

**NOTE**

- Changing the tone selection causes DSP* to switch automatically to the default setting for the newly selected tone. This causes any notes that are sounding at the time of the change to be interrupted momentarily. The DSP* will be set to the default setting for the newly selected tone when the note resumes. (*See page E-7)

## Adjusting the Brilliance of a Tone

You can adjust the clarity and sharpness of a tone to suit your music and personal preferences.

1. While holding down the **FUNCTION** button, use the keyboard keys shown below to adjust the brilliance of a tone to the level that you want.

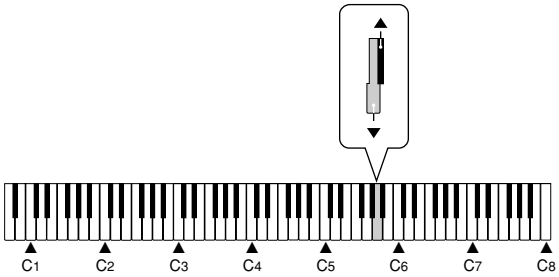


▼ : produces a more mellow sound
▲ : produces a brighter sound

- To return the brilliance setting to its initial default, hold down the FUNCTION button and press both of the keyboard keys [▼] and [▲] at the same time.

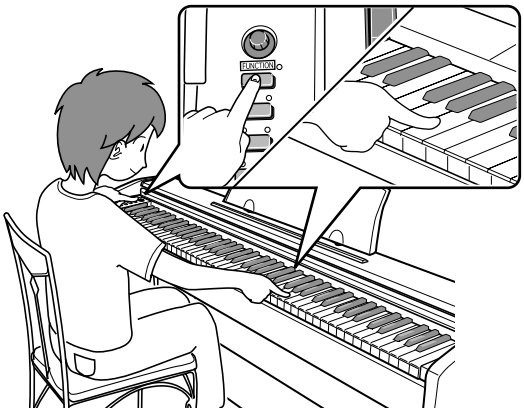

## Layering Two Tones

Use the following procedure to layer to two tones, so they sound at the same time.
Of the two keyboard keys you press to layer two tones, the one on the left is the main tone, while the one on the right is the layered tone.

1. While holding down the **FUNCTION** button, simultaneously press the keyboard keys that correspond to the two tones that you want to layer.

   *Example*: To layer GRAND PIANO 2 and STRINGS

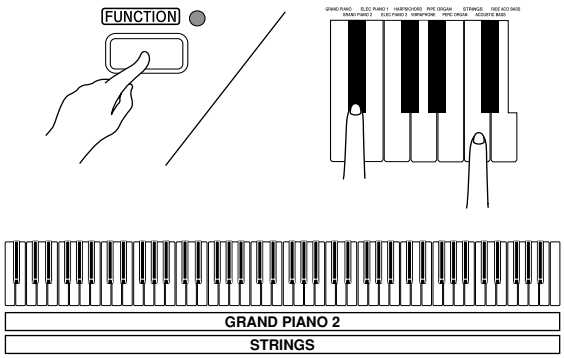


   - The tones are now layered.

2. After you are finished using the layered tones, press the **GRAND PIANO** button or select the tone to unlayer them.

### Adjusting the Volume Balance between Two Layered Tones

1. While holding down the **FUNCTION** button, use the keyboard keys shown below to adjust the volume of the layered tones.

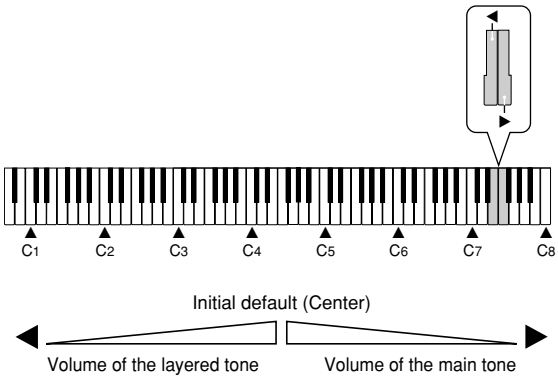


   - To return the volume setting to its initial default, hold down the FUNCTION button and press both of the keys at the same time.

## Assigning Different Tones to the Left and Right Sides of the Keyboard

You can assign different tones to keys on the left side and the right side of the keyboard.

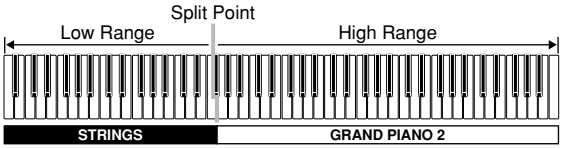


1. Select the tone you want to assign to the high (right) side of the keyboard (see page E-5).

   *Example*: GRAND PIANO 2

2. Press the **SPLIT** button.
   - This causes the SPLIT indicator lamp to light.

3. Select the tone you want to assign to the low (left) side of the keyboard (see page E-5).
   - The keyboard is now split between the two tones.

   *Example*: STRINGS

4. After you are finished using the split keyboard, press the **SPLIT** button again to unsplit it.
   - This causes the SPLIT indicator lamp to go out.

### Specifying the Keyboard Tone Split Point

1. While holding down the **SPLIT** button, press the keyboard key where you want the left limit of the high range (right) tone to be.

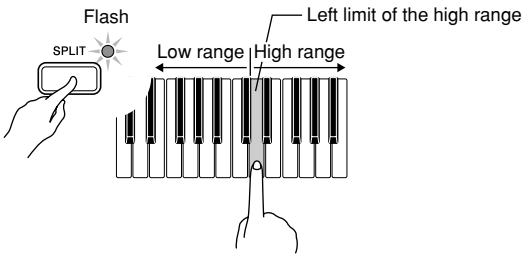

## Using Tone Effects

Reverb: Makes your notes resonate
Chorus: Adds more breadth to your notes

### Selecting the Effect Setting

There are four reverb and four chorus types.

1 While holding down the **FUNCTION** button, press one of the keyboard keys shown below to select the effect setting.

**[Reverb]**

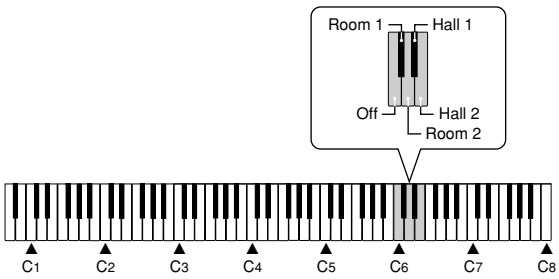


**[Chorus]**

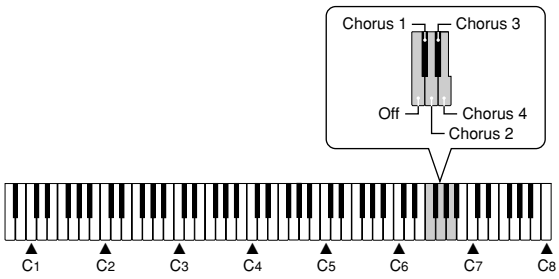


### About DSP

DSP makes it possible to digitally produce complex acoustic effects.
The DSP is assigned to each tone whenever you turn on digital piano power.

#### Turning DSP On and Off

1 While holding down the **FUNCTION** button, press one of the keyboard keys shown below to turn DSP on or off.

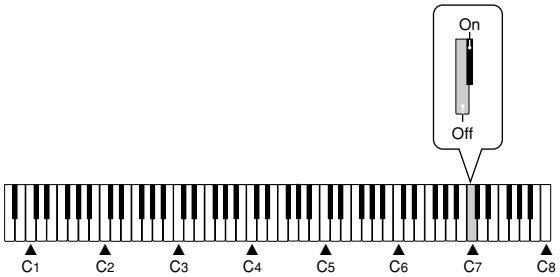


**NOTE**

- Under initial default settings, DSP is on for the main tone, and layer and split are turned off. DSP can be applied to only one part as shown below.

| | Main Tone | Layer Tone | Split Tone |
|---|---|---|---|
| Initial Defaults | On | Off | Off |
| Layer Tone DSP On | Off | On | Off |
| Split Tone DSP On | Off | Off | On |

- You can turn chorus on or off for each main tone, layer tone, and split tone part.
- You cannot turn reverb on or off for each main tone, layer tone, and split tone part.

## Using the Piano's Pedals

The digital piano comes equipped with the three pedals shown in the illustration below.

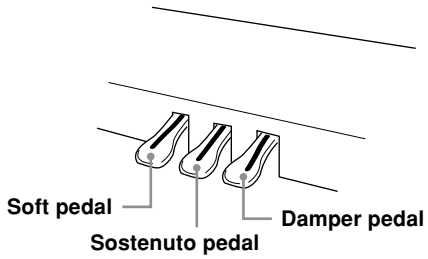


#### Pedal functions

- **Damper Pedal**
  Pressing the damper pedal while playing will cause the notes you play to reverberate for a very long time. When GRAND PIANO or GRAND PIANO 2 is selected as the tone, using this pedal causes note to reverberate just like the pedal on an acoustic grand piano.
- **Soft Pedal**
  Pressing this pedal while playing weakens notes played on the keyboard after the pedal was pressed, and makes them sound softer.
- **Sostenuto Pedal**
  Only the notes of the keys that are depressed when this pedal is pressed are sustained until the pedal is released.

## Adjusting the Effect Applied when the Damper Pedal is Pressed Half Way

You can specify to what extent the damper effect should be applied when you press the damper pedal half way. This effect is available with piano tones (GRAND PIANO/GRAND PIANO 2) only. A setting in the range of 0 (no effect) to 42 (same effect as full press) can be specified.

1. While holding down the **FUNCTION** button, press one of the keyboard keys shown below to specify the setting you want.

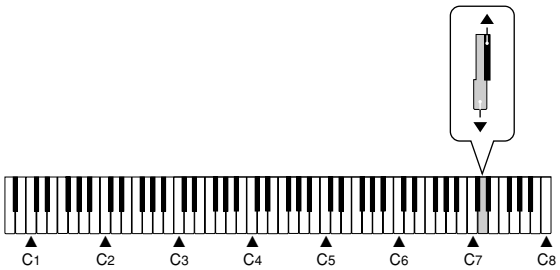


▼ : Decreases the effect
▲ : Increases the effect

- To return the volume setting to its initial default, hold down the FUNCTION button and press both of the keys at the same time.

## Using the Built-in Metronome

You can use the metronome to sound a count that helps keep you in proper time.

1. Press the **METRONOME** button.
   - This starts the metronome.

2. While holding down the **FUNCTION** button, use the keyboard keys shown below to specify how many beats there are per measure.

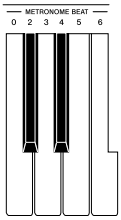


- The first value of the beat can be set to a value of 2 through 6. The bell (indicating the first beat of a measure) does not sound while a value of 0 is specified. All beats are indicated by a click sound. This setting lets you practice with a steady beat, without worrying about how many beats there are in each measure.

3. While holding down the **FUNCTION** button, use the keyboard keys shown below to specify the tempo (speed) of the metronome.

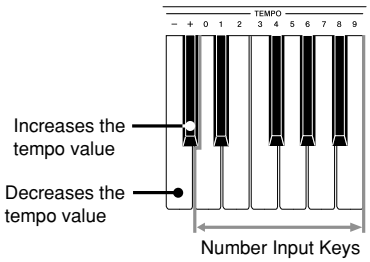


- While holding down the FUNCTION button, press keyboard keys (+) and (–) at the same time to return the tempo setting to its initial default.
  * Tempo Range: 30 to 255

4. Press the **METRONOME** button again to stop the metronome.

# Learning to Play the Music Library Tunes

## Playing a Music Library Tune

Your piano comes with 60 Music Library tunes built in. See the Song List on page A-1 of this manual for more information.

1. While holding down the **FUNCTION** button, press the keyboard keys shown below to select a tune number.

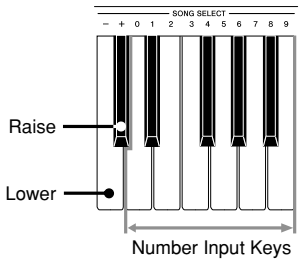


- Pressing the keyboard keys (+) and (–) at the same time selects tune 00.
- You cannot use layer or split while playing a built-in tune.

2. Press the **START/STOP** button.
   - This starts the playback of the tune.
3. Press the **START/STOP** button again to stop tune playback.

### To adjust the tempo

1. While holding down the **FUNCTION** button, use the keyboard keys shown below to change the tempo (speed).

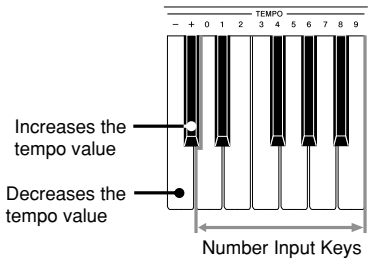


- To return to its standard tempo setting, press the keyboard keys (+) and (–) at the same time.

### Turning the Count On and Off

Use the following procedure to turn the count that sounds at the beginning of a song on and off.

1. While holding down the **FUNCTION** button, press one of the keyboard keys shown below to turn the count tone on or off.

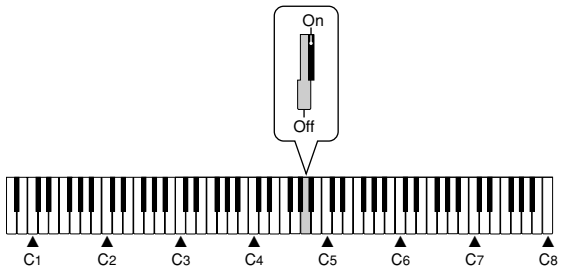


## Practicing a Music Library Tune

You can turn off the left hand part or right hand part of a Music Library tune and play along on the piano.

**PREPARATION**

- Select the tune you want to practice and adjust the tempo (See "To adjust the tempo" on page E-9).
- The maximum tempo setting for each tune is double the initial default tempo of the tune.
- A number of tunes have tempo changes part way through in order to produce specific musical effects.

1. Use the **PART/TRACK** button to turn parts on or off.
   - The indicator lamps above the button show the current on/off status of the parts.
2. Press the **START/STOP** button.
   - This starts playback of the tune, without the part you selected in step 1.
3. Play the missing part on the piano's keyboard.
4. Press the **START/STOP** button again to stop song playback.

## Adjusting Built-in Tune Volume

Perform the following operation to change the volume level of the built-in tune.

1. While holding down the **FUNCTION** button, use the keyboard keys shown below to raise (▲) or lower (▼) the tune volume.

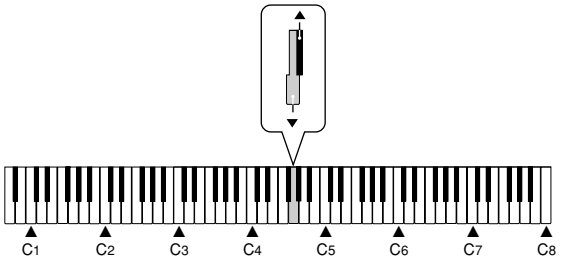


▲: Raises the tune volume
▼: Lowers the tune volume

# Recording to and Playing Back from Song Memory

You can store the notes you play in Song Memory for later playback.

**NOTE**

- You cannot use layer or split with Song Memory record operation.

## Tracks

The song memory of this piano records and plays back notes much like a standard tape recorder. There are two tracks, each of which can be recorded separately. Besides notes, each track can be assigned its own tone number. During playback you can adjust the tempo to change the speed of playback.

## Song Memory Capacity

- You can store a total of up to about 10,000 notes (Track 1 + Track 2) in Song Memory.
- Recording stops automatically if the number of notes in Song Memory exceeds the maximum while you are recording. This is indicated by the REC indicator lamp turning off.

## Other Song Memory Data

The following data is included when recording to Song Memory: keyboard play, selected tone, tempo setting, pedal operations, reverb and chorus settings, DSP on/off setting, brilliance setting.

## Recorded Data Storage

This digital piano has a lithium battery to supply power to retain memory contents even while power is off.* The life of the lithium battery is five years after the date of manufacture of the digital piano. Be sure to contact your CASIO service provider about having the lithium battery replaced every five years.

* Never turn off piano power while a record operation is in progress.

**IMPORTANT!**

- If the data recorded in a single track uses up all the available Song Memory capacity, you will not be able to record anything in the other track.
- Recording new data to a track automatically deletes any data previously stored in that track.
- Turning off power while a record operation is in progress deletes anything recorded up to that point.
- CASIO COMPUTER CO., LTD. shall not be held responsible for any losses by you or any third party due to loss of data caused by malfunction or repair of this digital piano, or by battery replacement.

## SONG MEMORY Button Operation

Each press of the SONG MEMORY button cycles through the functions shown below.

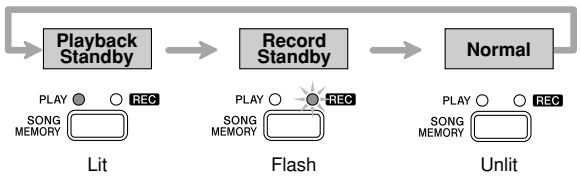


# Recording Your Keyboard Play

You can record to either track with or without playback of the other track.

## To record to one track without playing back the other

When recording a different tune to Track 2 after recording to Track 1, make sure you carefully read the notes under steps 1 and 2 before actually performing the steps.

1. Press the **SONG MEMORY** button so the PLAY indicator lamp is lit.

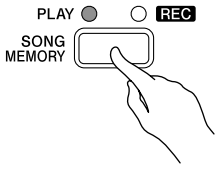


- Select the tone and effects you want to use in your recording, and configure the tempo setting.

**NOTE**

- If you are recording a different tune to Track 2 after recording to Track 1, press the PART/TRACK button to turn off the L/T1 indicator lamp.

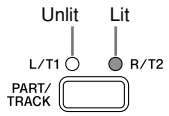


2 Press the **SONG MEMORY** button so the REC indicator lamp is flashing.

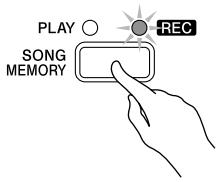


- At this time the L/T1 indicator lamp should also be flashing. This indicates that the piano is standing by for recording to Track 1.

**NOTE**

- If you want to record to Track 2, press the PART/TRACK button here. This will cause the R/T2 indicator lamp to flash, which indicates that the piano is standing by for recording to Track 2.

- If you want to use the metronome during recording, press the METRONOME button to start it. The metronome beat setting changes to 0 automatically while you are using Song Memory. This setting is fixed and cannot be changed.

3 Start playing something on the keyboard.

- This will automatically start recording.

4 When you are finished, press the **START/STOP** button to stop recording.

- Stopping recording causes the REC indicator lamp to go out, and indicator lamp above the button of the track to which you recorded to light.
- To play back the track you just recorded, press the START/STOP button again.

5 After you are finished recording or playing back, press the **SONG MEMORY** button so the PLAY indicator lamp or REC indicator lamp turns off.

## To record to a track while playing back from the other

After you finish recording, you can play back Track 1 and Track 2 at the same time.

*Example*: To record to Track 2 while playing back the contents of Track 1

1 Press the **SONG MEMORY** button so the PLAY indicator lamp is lit.

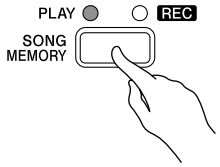


- Select the tone and effects you want to use while recording.

2 Press the **PART/TRACK** button so L/T1 indicator is lit.

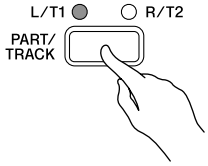


3 Press the **SONG MEMORY** button again.

- This causes the L/T1 indicator lamp to flash. Press the PART/TRACK button, so it causes the R/T2 indicator lamp to flash, which indicates that the piano is standing by for recording to Track 2.

4 Press the **START/STOP** button or play something on the keyboard to start simultaneous playback from Track 1 and recording to Track 2.

5 When you are finished, press the **START/STOP** button again to stop recording.

## Playing Back from Song Memory

1 Press the **SONG MEMORY** button so the PLAY indicator lamp is lit.

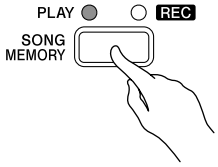


2 Use the **PART/TRACK** button to select the track you want to play back.

- The indicator lamps above the button show the currently selected track.
  - To play back Track 1, the L/T1 indicator lamp should be lit.
  - To play back Track 2, the R/T2 indicator lamp should be lit.
  - To play back Track 1 and Track 2, both the indicator lamps should be lit.

3 Press the **START/STOP** button.

- This starts playback of the track you selected.
- You can change the tempo setting as a track is playing.
- As a track is playing, you can turn the metronome on or off using the METRONOME button.
- You cannot change the tone setting during playback.
- Press the START/STOP button again to stop playback.

**NOTE**

- Data played back from Song Memory is not sent from the MIDI OUT terminal.

## Deleting Song Memory Data

**IMPORTANT!**

- The procedure below deletes all of the data from the selected track. Note that the delete operation cannot be undone. Check to make sure you really do not need the data in Song Memory before you perform the following steps.

1 Press the **SONG MEMORY** button so the REC indicator lamp is flashing.

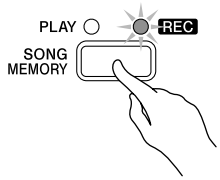


2 Use the **PART/TRACK** button to select the track you want to delete.

- The indicator lamps above the button show the currently selected track.
- To delete Track 1, the L/T1 indicator lamp should be flashing.
- To delete Track 2, the R/T2 indicator lamp should be flashing.

3 Hold down the **SONG MEMORY** button until the REC indicator lamp stops flashing and remains lit.

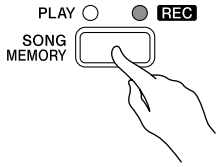


4 Press the **PART/TRACK** button.

- This deletes the selected track and enters the standby state.

# Other Settings

## Changing the Keyboard Touch

This setting changes the relative touch of the keyboard keys.

1 While holding down the **FUNCTION** button, press one of the keyboard keys shown below.

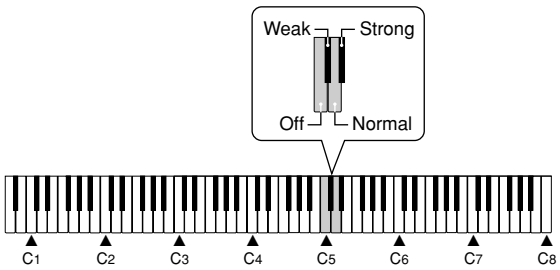


Off
Weak (Strong sound is produced even when relatively light pressure is applied.)
Normal
Strong (Normal sound is produced even when relatively strong pressure is applied.)

## Changing the Piano Key

Use this setting to raise or lower the overall key of the keyboard in semitone steps.

1 Holding down the **FUNCTION** button, press the keyboard keys to raise or lower the overall key of the keyboard.

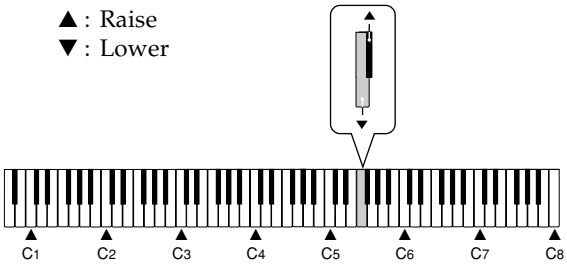


**NOTE**

- To return the piano key to C, hold down the FUNCTION button and press the keyboard keys [▼] and [▲] at the same time.
- After using Transpose to raise the keyboard to a high key, notes played at the highest range of the keyboard may not sound properly for certain tones.

## Changing the Pitch of the Piano to Match Another Instrument

Use this setting to raise or lower the overall pitch of the piano. The setting range is plus or minus 50 cents (100 cents = 1 semitone) from the standard pitch of A4 = 440.0Hz.

1 Holding down the **FUNCTION** button, press the keyboard keys to raise or lower the overall pitch of the piano.

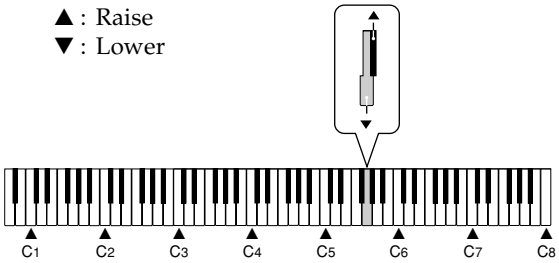


* Each press of the button changes the current setting by approximately 1 cents (1/100 semitone).

**NOTE**

- Holding down the FUNCTION button and pressing the keyboard keys [▼] and [▲] at the same time returns tuning to the standard A4 = 440.0Hz.

## Using Digital Piano Setup Memory

When setup memory is turned on, the digital piano will remember its setup* whenever you turn it off. If you turn off setup memory, settings will be cleared when you turn off the digital piano.

* song select, keyboard touch, damper pedal setting, layered tone volume balance, split point, metronome beat, and send channel

**NOTE**

- If the power is turned off during record standby or playback standby of the Song Memory function (see page E-10) when this setting is on, the following settings are retained in memory in addition to the normal settings indicated above. These settings will be recalled from memory the next time the digital piano enters the Song Memory playback standby mode.

  Tone, Split on/off, Transpose, Tuning, Chorus

1 While holding down the **FUNCTION** button, press one of the keyboard keys shown below to turn setup memory on or off.

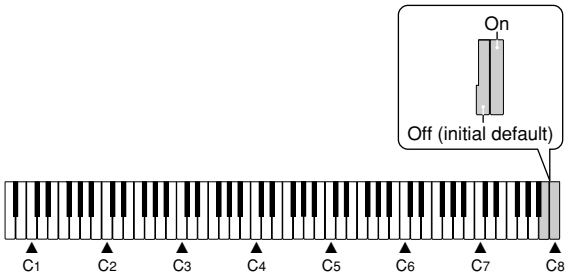


# Using MIDI

## What is MIDI?

The letters MIDI stand for Musical Instrument Digital Interface, which is the name of a worldwide standard for digital signals and connectors that makes it possible to exchange musical data between musical instruments and computers (machines) produced by different manufacturers.

**NOTE**

- For detailed information about MIDI Implementation, visit the CASIO website at: http://world.casio.com/.

## MIDI Connections

### Send

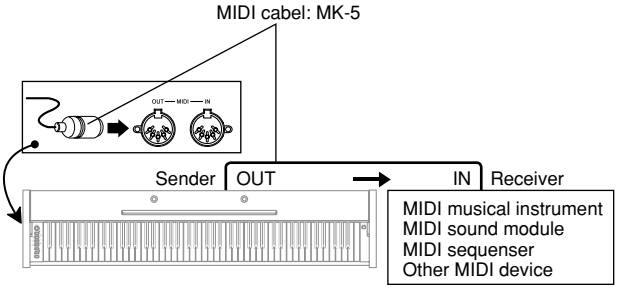


### Receive

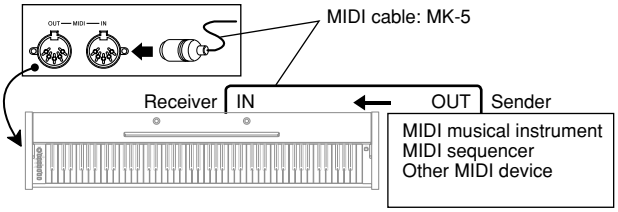


## MIDI Settings

**❶ Send Channel**

Use this setting to specify one of the MIDI channels (1 through 16) as the Send Channel for sending MIDI messages to an external device.

**❷ Local Control**

This setting controls whether or not power is cut off internally from the piano's keyboard and sound source. Turning off Local Control cuts off power to the keyboard and source, which means that the piano does not produce any sound when played. This comes in handy when you want to turn off the piano's keyboard and play back from an external sequencer or other device.

1 While holding down the **FUNCTION** button, press one the keyboard keys shown below to configure the setting you want.

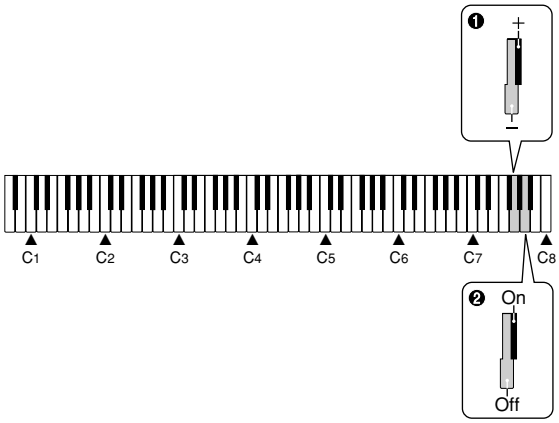


**❶ Send Channel**

–: Decreases value
+: Increases value

**❷ Local Control**

Off
On

# Assembling the Stand

## Unpacking

***Getting Ready***

- Before starting assembly, check to make sure that you have all the parts shown below. You can find the screws in a plastic bag inside of the polystyrene foam packing material.
- This stand does not include any of the tools required for assembly. It is up to you to prepare a large Philips head (+) screwdriver for assembly.

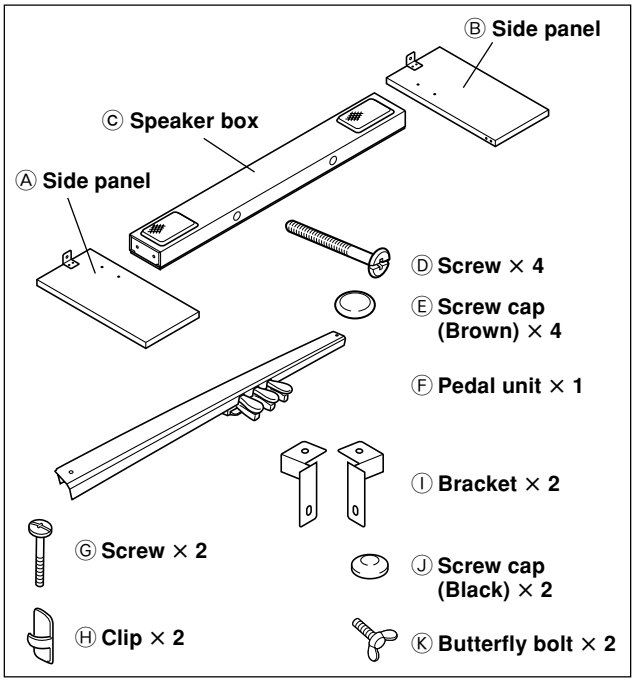


- Before starting assembly of the stand, divide the polystyrene foam packing material into four parts.

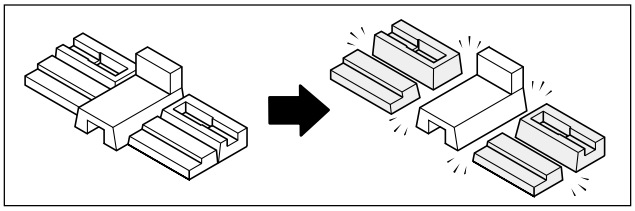

## Assembling the Stand

**⚠ CAUTION**

- This stand should be assembled by two people working together.
- The stand should be assembled on a flat surface.
- Do not remove the tape securing the keyboard cover in place until assembly is complete. Removing the tape can cause the keyboard cover to open and close during assembly, creating the risk of personal injury to your hands and fingers.
- Take care that you do not pinch your fingers between parts when assembling them.
- When placing the digital piano unit on the floor, be sure to place it on something soft (a blanket, cushion, etc.). Do not place the digital piano directly onto the floor.

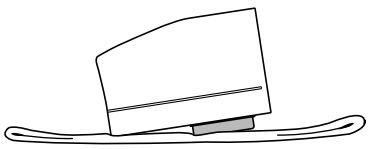

When assembling the stand and speaker box Ⓒ, lay the stand down so it is on its side.

***Getting Ready***

- Use the four pieces of polystyrene foam to secure side panels Ⓐ and Ⓑ in place. You will have an easier time assembling the stand if you raise the side panels up off the ground as shown in the illustration.
- If you do not have any packing material available, use a magazine or some other thick item.

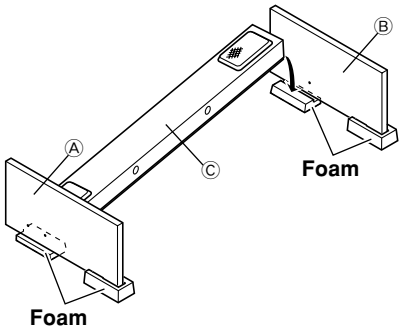


**1** Attach side panels Ⓐ and Ⓑ to the speaker box Ⓒ. Secure the side panels using four screws Ⓓ.

- Align the holes in speaker box Ⓒ with the holes in the side panels, and secure them together using the screws Ⓓ.
- Partially tighten the screws on one side of the speaker box Ⓒ and then tighten the screws on the other side completely.
- Next, fully tighten the screws that you partially tightened.

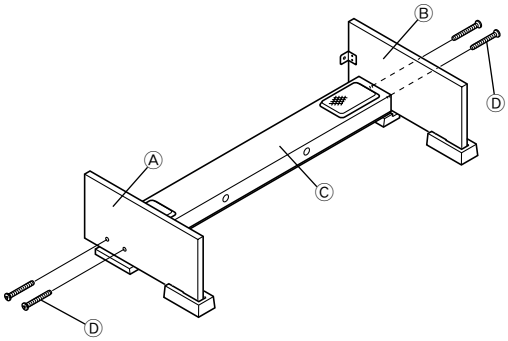


* You can also install the speaker box so it faces outwards towards the back.

**2** After ensuring that all of the screws are fully tightened, remove the packing material and stand up the stand.

3 Attach the brackets Ⓘ to the pedal unit Ⓕ, and temporarily secure them with the screws Ⓖ.

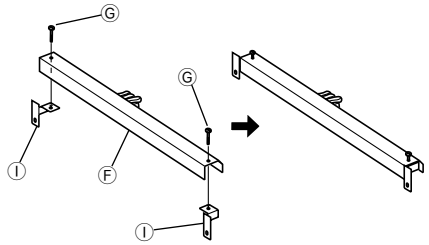


4 Remove the screws that hold the corner brackets in place on the back corners (the corners away from the pianist) of the side panels.

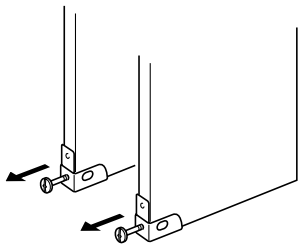

5 Insert the plates on either end of the pedal unit into the space between the corner brackets and the edge of the side panels.

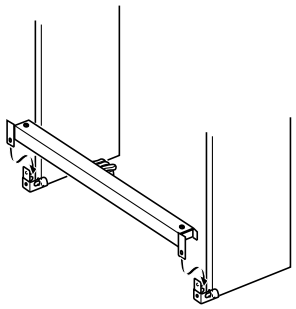

## Protecting the Digital Piano against Tipping Over

When locating the stand where it is not against a wall creates the risk of it tipping over. To prevent this, orient the corner brackets as shown below and insert the pedal unit plates behind the corner brackets.

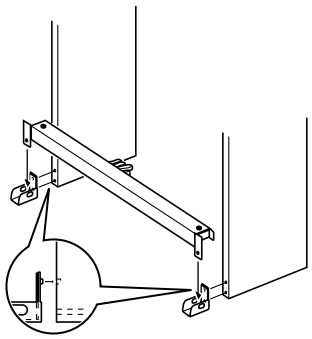

6 Secure the corner brackets to the stand using the screws you removed in step 4.

***Important!***
When tightening the corner bracket screws, press down on the pedal unit to ensure that the pedal part comes into contact with the floor.

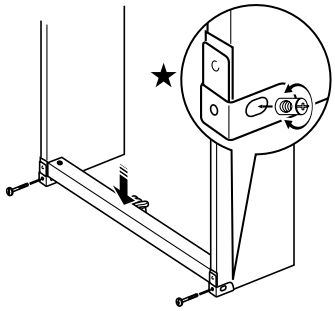


- The side panels have joint connectors inside that engage with the corner bracket screws. If you have trouble inserting the corner bracket screws, use a screwdriver to adjust the position of the joint connector as shown in the illustration (★).

7 Securely tighten the screws Ⓖ that you temporarily tightened in step 3.

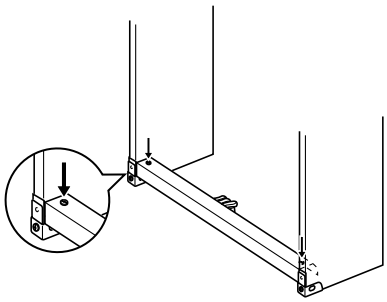

8 Cover the screw heads with the screw caps Ⓙ.

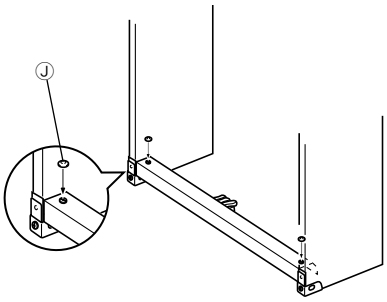

## Mounting the Digital Piano onto the Stand

**9** Place the digital piano onto the stand.

- At this time, make sure that the pegs on the stand (indicated by ★ in the illustration) enter the holes in the bottom of the digital piano.
- Use the butterfly bolts Ⓚ to secure the digital piano to the stand.

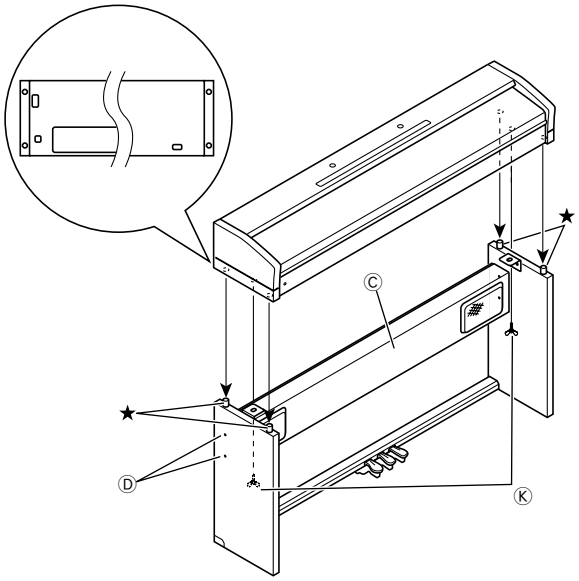


***Important!***
If the stand pegs do not align properly with the holes in the digital piano, loosen the screws Ⓓ that secure one of the side panels to the speaker box Ⓒ (one side only) one or two turns. Next, mount the digital piano. After the digital piano is mounted properly, retighten the screws Ⓓ that you loosened.

**10** Connect the cable to the speaker connector (indicated by ★ in the illustration).

- Cover each of the four side panel screws with screw caps Ⓔ.

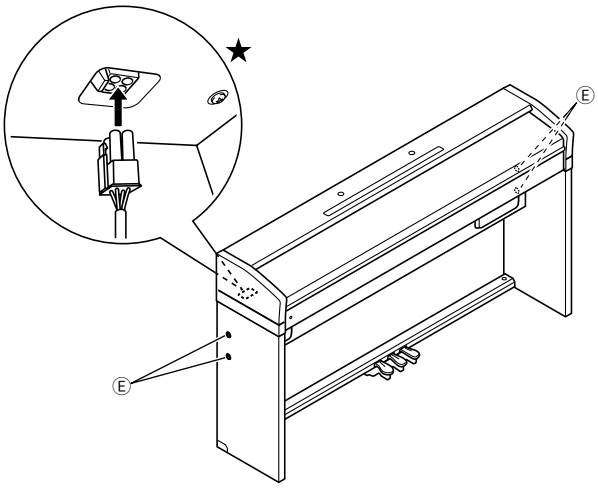


**11** Orienting the pedal unit plug as shown in the illustration, plug it into the pedal connector on the bottom of the digital piano. Secure the pedal cord with the clips Ⓗ.

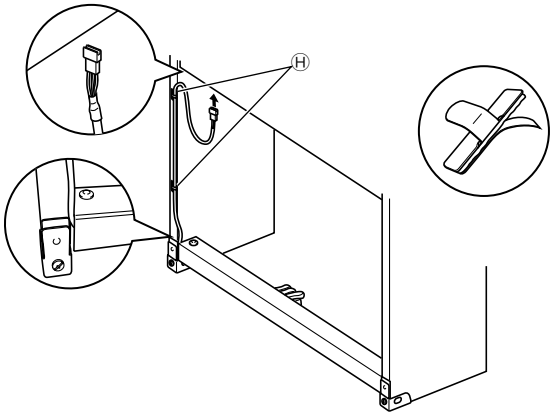


- Attach the clips Ⓗ at two locations to the stand's side panel as shown in the illustration.

## Installing the Music Stand

**1** Slide the music stand under the two bolts on the top of the digital piano and then tighten the bolts.

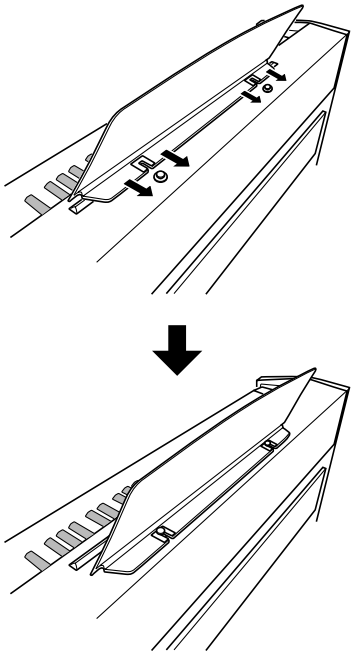

# Troubleshooting

| Symptom | Possible Cause | Action | Reference |
|---|---|---|---|
| No sound produced when keyboard keys are pressed. | 1. VOLUME knob set to MIN.<br>2. Headphones connected to the digital piano.<br>3. Local Control turned off. | 1. Move the VOLUME knob more towards MAX.<br>2. Disconnect the headphones from the digital piano.<br>3. Turn on Local control. | Page E-5<br>Page E-2<br>Page E-14 |
| Keyboard out of tune. | 1. The piano key is set to a value other than C.<br>2. Incorrect pitch setting of the piano. | 1. Change the piano key setting to C, or turn the digital piano power off and then back on again.<br>2. Correct the pitch setting, or turn the digital piano power off and then back on again. | Page E-13<br>Page E-13 |
| No sound produced by demo tune play. | 1. VOLUME knob set to MIN.<br>2. Headphones connected to the digital piano. | 1. Move the VOLUME knob more towards MAX.<br>2. Disconnect the headphones from the digital piano. | Page E-5<br>Page E-2 |
| Memory contents deleted. | Lithium battery is dead. | Contact your CASIO Service Provider for replacement of the lithium battery. | Page E-20 |
| No sound produced by connected external MIDI sound source when the digital piano keys are pressed. | 1. The digital piano Send Channel does not match the Send Channel of the MIDI sound source.<br>2. Volume or expression setting of the external sound source is set to 0. | 1. Change the Send Channel settings so they are identical.<br>2. Change the volume or expression setting of the external sound source to an appropriate value. | Page E-14<br>See the documentation that comes with the external sound source. |
| A tone's quality and volume sounds slightly different depending where it is played on the keyboard. | This is an unavoidable result of the digital sampling process,* and does not indicate malfunction.<br>* Multiple digital samples are taken for the low range, middle range, and high range of the original musical instrument. Because of this, there may be a very slight difference in tonal quality and volume between sample ranges. | | |

# Specifications

| | |
|---|---|
| **Model:** | PX-700 |
| **Keyboard:** | 88 piano keys (with touch response) |
| **Polyphony:** | 32 notes, maximum |
| **Tones:** | 11; with layer, split |
| **Digital Effects:** | Reverb (4 types), Chorus (4 types), DSP, Brilliance |
| **Metronome:** | • Time Signatures: 0, 2, 3, 4, 5, 6<br>• Tempo Range: 30 to 255 |
| **Music Library:** | • Number of Tunes: 60<br>• Tune Volume: Adjustable<br>• Demo: Sequential looping of all 60 preset tunes<br>• Part On/Off: Left hand, right hand |
| **Song Memory:** | • Operations: Real-time recording, playback<br>• Capacity: Approximately 10,000 notes (2 tracks total)<br>• Memory Backup: Built-in lithium battery (Battery Life: 5 years) |
| **Pedals:** | Damper, Soft, Sostenuto |
| **Other Functions:** | • Touch: 3 types, off<br>• Transpose: 1 octave (F♯ to C to F)<br>• Tuning: A4 = 440.0Hz ±50 cents (adjustable) |
| **MIDI:** | 16 multi-timbre receive |
| **Input/Output:** | • Headphones: Stereo standard jacks × 2<br>Output Impedance: 170Ω<br>Output Voltage: 5.5V (RMS) MAX<br>• Power: 12V DC<br>• MIDI (OUT) (IN)<br>• Pedal connector |
| **Speakers:** | 12cm × 2 (Output: 8.0W + 8.0W) |
| **Power Supply:** | AC Adaptor: AD-12 |
| **Power Consumption:** | 12V ⎓ 18W |
| **Dimensions:** | Digital piano + stand: 136.9 × 30.0 × 78.9 cm (53 $^{15}/_{16}$ × 11 $^{13}/_{16}$ × 31 $^{1}/_{16}$ inch) |
| **Weight:** | Digital piano + stand: Approximately 32.5 kg (71.6 lbs) |

• Design and specifications are subject to change without notice.

# Operational Precautions

## Locating the Unit

Avoid the following locations.
- Areas exposed to direct sunlight and high humidity
- Areas subjected to very low temperatures
- Near a radio, TV, video deck, or tuner (unit can cause interference with audio or video signals)

## Care of the Unit

- Never use benzene, alcohol, thinner or other such chemicals to clean the exterior of the unit.
- To clean the keyboard, use a soft cloth dampened with a weak solution of a mild neutral detergent and water. Wring out all excess moisture from the cloth before wiping.

## Lithium Battery

This unit is equipped with a lithium battery to provide power needed to retain memory contents while unit power is turned off. Should the lithium battery go dead, all memory contents will be lost whenever you turn unit power off. The normal life of the lithium battery is five years from the time that the battery was installed. Be sure to periodically contact your retailer or authorized service provider to have the lithium battery replaced. Note that you will be charged separately for lithium battery replacement.

- Note that CASIO COMPUTER CO., LTD. shall not be held liable for any damages or losses or any claims by third parties arising from corruption or loss of data caused by malfunction or repair of the unit, or from battery replacement.

You may notice lines in the finish of the case of this product. These lines are the result of the molding process used to shape the plastic of the case. They are not cracks or breaks in the plastic, and are no cause for concern.

**NOTE**

- Unauthorized reproduction of this manual in its entirety or in part is expressly forbidden. All rights reserved.
- CASIO COMPUTER CO., LTD. shall not be held liable for any damages or losses or any claims by third parties arising from use of this product or this manual.
- The contents of this manual are subject to change without notice.



406A-E-022A

# Setting Control Key Chart

While the FUNCTION button is depressed, the keyboard keys can be used to perform a variety of different setting functions.

* A value next to a note name indicates the relative position of the note on the keyboard as shown below.

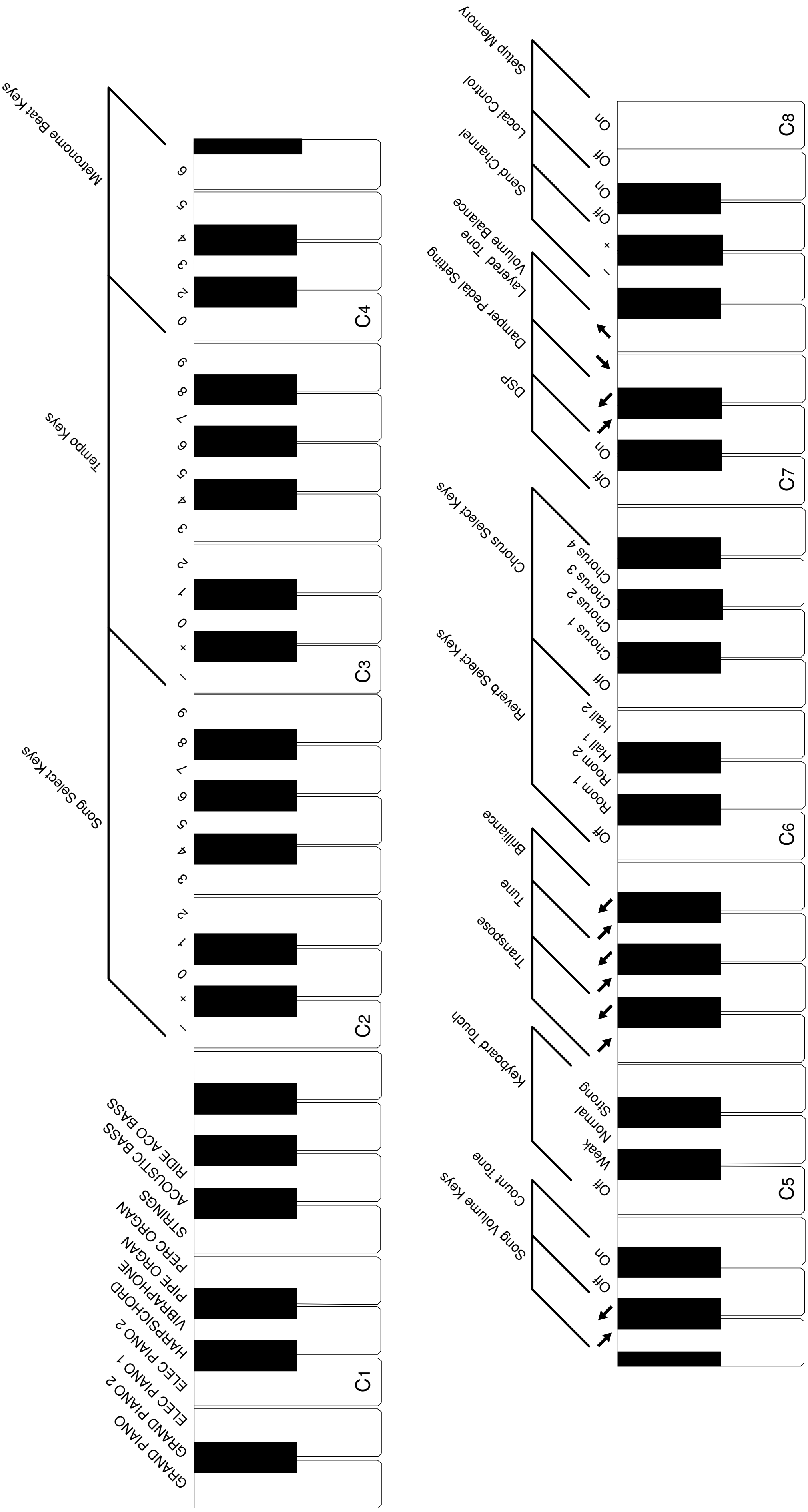

# Appendix/Apéndice

## Tone List/Lista de sonidos

| Tone Name/ Nombre de sonidos | Maximum Polyphony/ Polifonía máxima | Program Change/ Cambio de programa | Bank Select MSB/ MSB de selección de banco |
|---|---|---|---|
| GRAND PIANO | 16 | 0 | 100 |
| GRAND PIANO 2 | 32 | 1 | 100 |
| ELEC PIANO 1 | 32 | 4 | 48 |
| ELEC PIANO 2 | 16 | 5 | 48 |
| HARPSICHORD | 32 | 6 | 48 |
| VIBRAPHONE | 32 | 11 | 48 |
| PIPE ORGAN | 32 | 19 | 48 |
| PERC ORGAN | 16 | 17 | 48 |
| STRINGS | 32 | 49 | 48 |
| ACOUSTIC BASS | 32 | 32 | 48 |
| RIDE ACO BASS | 16 | 32 | 49 |

## Song List/Lista de canciones

| No./Nº | Song Name/Nombre de canciones |
|---|---|
| 00 | Arabesque 1 |
| 01 | Nocturne Op.9-2 |
| 02 | Fantaisie-Impromptu Op.66 |
| 03 | Etude Op.10-3 “Chanson de l’adieu” |
| 04 | Prelude Op.28-7 |
| 05 | Ave Maria |
| 06 | Fröhlicher Landmann |
| 07 | Canon in D Major |
| 08 | Menuet [Klavierbüchlein für Anna Magdalena Bach] |
| 09 | Praeludium 1 [Wohltemperierte Klavier 1] |
| 10 | Jesus Bleibet Meine Freude |
| 11 | Gavotte |
| 12 | Serenade [Eine Kleine Nachtmusik] |
| 13 | Sonata K.331 3rd Mov. “Turkish March” |
| 14 | Ode To Joy |
| 15 | Für Elise |
| 16 | Sonata Op.27-2 “Moonlight” 1st Mov. |
| 17 | Waltz Op.39-15 (Duets) |
| 18 | La Prière d’une Vierge |
| 19 | Sicilienne Op.78 |
| 20 | Gymnopédie 1 |
| 21 | Salut d’Amour |
| 22 | Amazing Grace |
| 23 | Over The Rainbow |
| 24 | Someday My Prince Will Come |
| Beyer Vorschule im Klavierspiel Opus 101 | |
| 25 | No.60 |
| 26 | No.78 |
| 27 | No.80 |
| 28 | No.91 |
| 29 | No.98 |
| Burgmüller 25 Leichte Etüden | |
| 30 | La Candeur |
| 31 | Arabesque |
| 32 | Pastorale |
| 33 | Petite Réunion |
| 34 | Innocence |
| 35 | Progrès |
| 36 | Courant Limpide |
| 37 | La Gracieuse |
| 38 | La Chasse |
| 39 | Tendre Fleur |
| 40 | La Bergeronnette |
| 41 | Adieu |
| 42 | Consolation |
| 43 | La Styrienne |
| 44 | Ballade |
| 45 | Douce Plainte |
| 46 | Babillarde |
| 47 | Inquiétude |
| 48 | Ave Maria |
| 49 | Tarentelle |
| 50 | Harmonie des Anges |
| 51 | Barcarolle |
| 52 | Retour |
| 53 | L’Hirondelle |
| 54 | La Chevaleresque |
| Czerny Etudes de Mécanisme Opus 849 | |
| 55 | No.1 |
| 56 | No.2 |
| 57 | No.13 |
| 58 | No.26 |
| 59 | No.30 |

Model **PX-700**

# MIDI Implementation Chart

Version: 1.0

| Function ... | | Transmitted | Recognized | Remarks |
|---|---|---|---|---|
| **Basic Channel** | **Default**<br>**Changed** | 1-16<br>1-16 | 1-16<br>1-16 | |
| **Mode** | **Default**<br>**Messages**<br>**Altered** | Mode 3<br>X<br>********** | Mode 3<br>X<br>********** | |
| **Note Number** | <br>**True voice** | 21-108<br>********** | 0-127<br>0-127 *1 | *1: Depends on tone<br>*1: Depende del tono. |
| **Velocity** | **Note ON**<br>**Note OFF** | O 9nH V = 1-127<br>X 9nH V = 0 | O 9nH V = 1-127<br>X 9nH V = 0, 8nH V = ** | **: no relation<br>**: sin relación |
| **After Touch** | **Key's**<br>**Ch's** | X<br>X | X<br>O | |
| **Pitch Bender** | | X | O | |
| **Control Change** | **0,32**<br>**1**<br>**6,38**<br>**7**<br>**10**<br>**11**<br>**16**<br>**17**<br>**18**<br>**19**<br>**64**<br>**66**<br>**67**<br>**71**<br>**72**<br>**73**<br>**74**<br>**76**<br>**77**<br>**78**<br>**80**<br>**81**<br>**82**<br>**83**<br>**91**<br>**93**<br>**98,99**<br>**100,101**<br>**120**<br>**121** | O<br>X<br>O<br>X<br>X<br>X<br>X<br>X<br>X<br>X<br>O<br>O<br>O<br>X<br>X<br>X<br>X<br>X<br>X<br>X<br>X<br>X<br>X<br>X<br>X<br>X<br>X<br>X<br>O<br>X<br>O | O<br>O<br>O<br>O<br>O<br>O<br>O<br>O<br>O<br>O<br>O<br>O<br>O<br>O<br>O<br>O<br>O<br>O<br>O<br>O<br>O<br>O<br>O<br>O<br>O<br>O<br>O<br>O<br>O<br>O<br>O<br>O | Bank select<br>Modulation<br>Data entry<br>Volume<br>Pan<br>Expression<br>DSP Parameter0<br>DSP Parameter1<br>DSP Parameter2<br>DSP Parameter3<br>Damper<br>Sostenuto<br>Soft<br>Resonance<br>Release Time<br>Attack Time<br>Brightness<br>Vibrato rate<br>Vibrato depth<br>Vibrato delay<br>DSP Parameter4<br>DSP Parameter5<br>DSP Parameter6<br>DSP Parameter7<br>Reverb send<br>Chorus send<br>NRPN LSB, MSB<br>RPN LSB, MSB<br>All sound off<br>Reset all controller |
| **Program Change** | <br>**:True #** | O 0-127<br>********** | O 0-127<br>********** | |
| **System Exclusive** | | O | O | |
| **System Common** | **: Song Pos**<br>**: Song Sel**<br>**: Tune** | X<br>X<br>X | X<br>X<br>X | |
| **System Real Time** | **: Clock**<br>**: Commands** | X<br>X | X<br>X | |
| **Aux Messages** | **: Local ON/OFF**<br>**: All notes OFF**<br>**: Active Sense**<br>**: Reset** | X<br>X<br>X<br>X | X<br>O<br>O<br>X | |
| **Remarks** | | | | |

Mode 1 : OMNI ON, POLY
Mode 2 : OMNI ON, MONO
Mode 3 : OMNI OFF, POLY
Mode 4 : OMNI OFF, MONO

O : Yes
X : No

This recycle mark indicates that the packaging conforms to the environmental protection legislation in Germany.

Esta marca de reciclaje indica que el empaquetado se ajusta a la legislación de protección ambiental en Alemania.

CASIO®

**CASIO COMPUTER CO.,LTD.**
6-2, Hon-machi 1-chome
Shibuya-ku, Tokyo 151-8543, Japan

P MA0603-B Printed in China
PX700ES1B